UNIT	DATE	DESCRIPTION
25.4[1.000]	05/01/26	MODIFY DRAWING FORMAT

NOTE:
1. IMPEDANCE: 75 Ohms;
2. METAL COMPONENTS: NO BURRS, SCRATCHES, OR PLATING PEELING ON SURFACE;

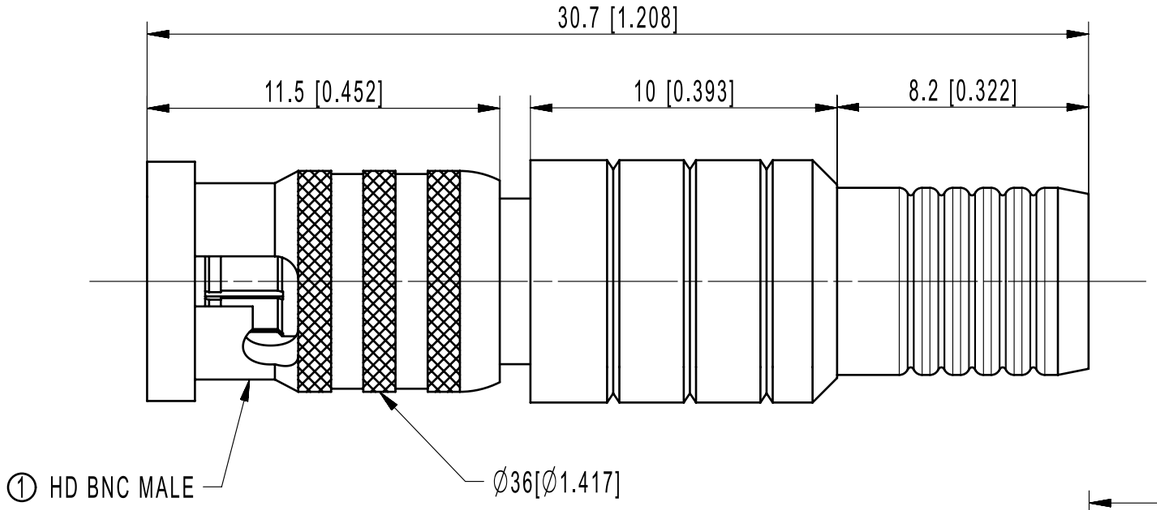

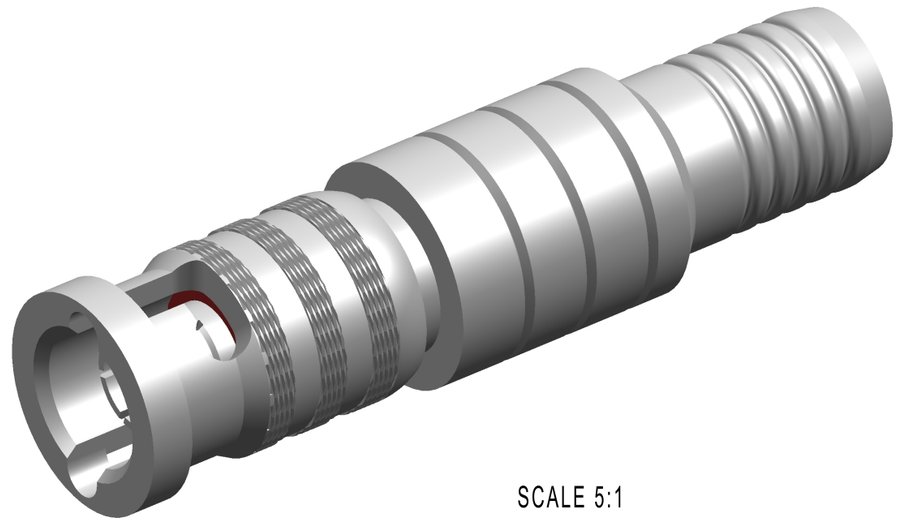

SCALE 5:1

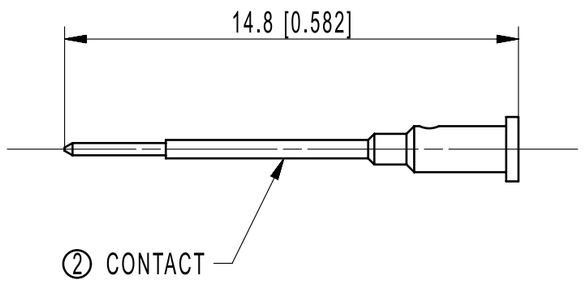

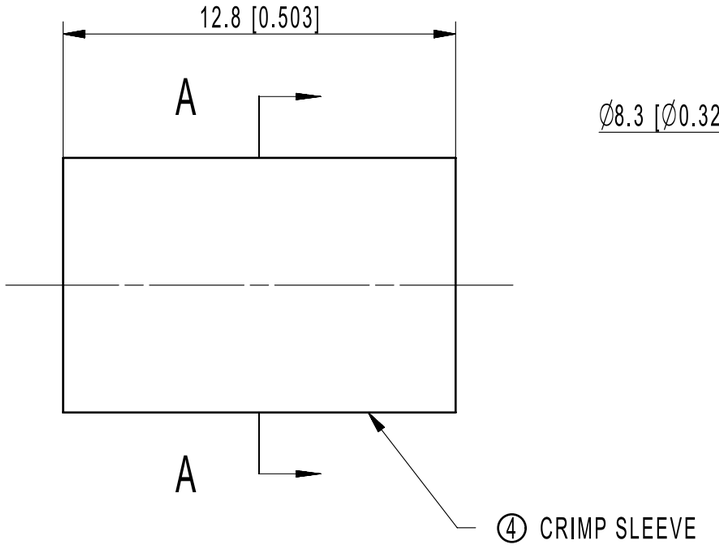

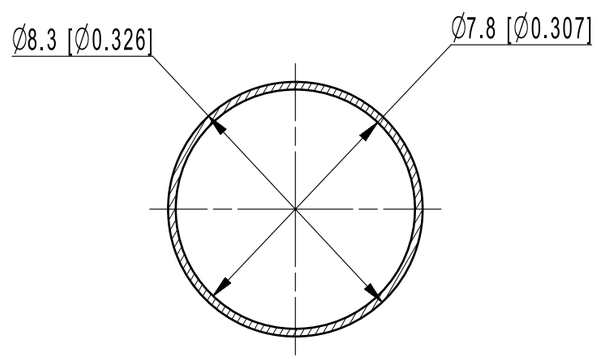

SECTION A-A

					THIRD-ANGLE PROJECTION		DATE 05/01/26
					APPROVED BY	CHECKED BY	DESIGNED BY
					ZZP 05/01/26	DZ 05/01/26	LB 05/01/26
4	CRIMP SLEEVE	BRASS	NICKEL PLATE	1			
3	INSULATION	PTFE	NONE	1	UNITS: mm[IN]	SCALE: N/A	REVISION: A
2	CONTACT	BRASS	GOLD PLATE	1	TOLERANCE		
1	HD BNC MALE	BRASS	NICKEL PLATE	1	X.X ±0.10 X.XX ±0.05 X° ±0.1°		
	DESCRIPTION	MATERIAL	FINISH				

Tel:86-0755-25614980
Email:info@rfsupplier.com
Website:www.rfsupplier.com

superbat

B07-SP1694A-41BS00

FOR REFERENCE ONLY

SUBJECT TO THE ACTUAL PRODUCT