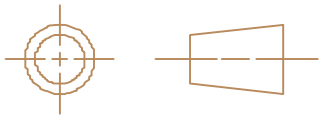

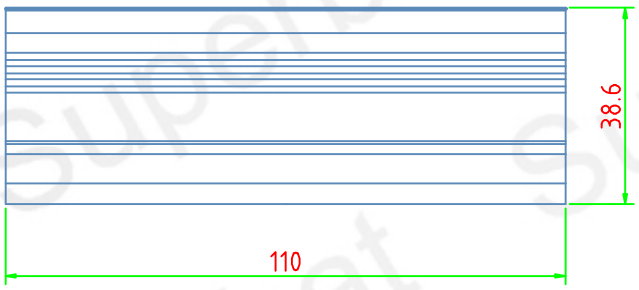

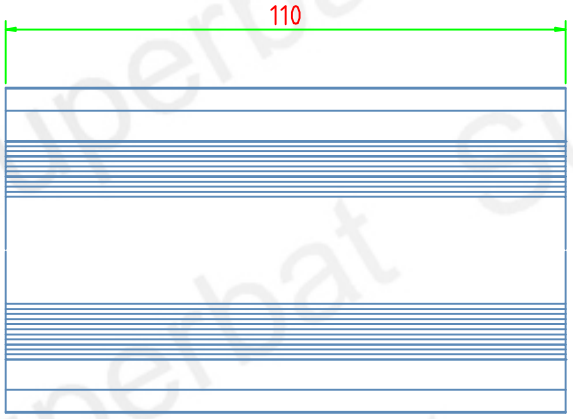

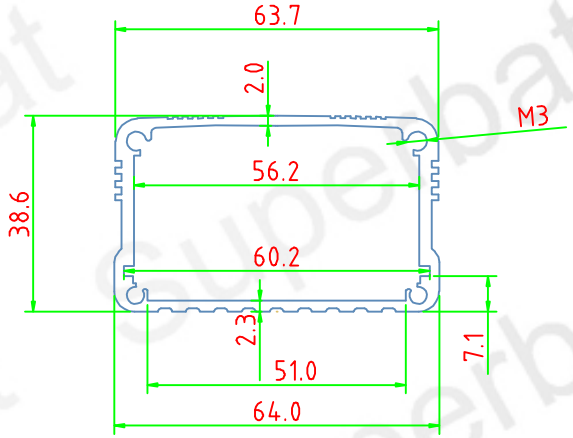

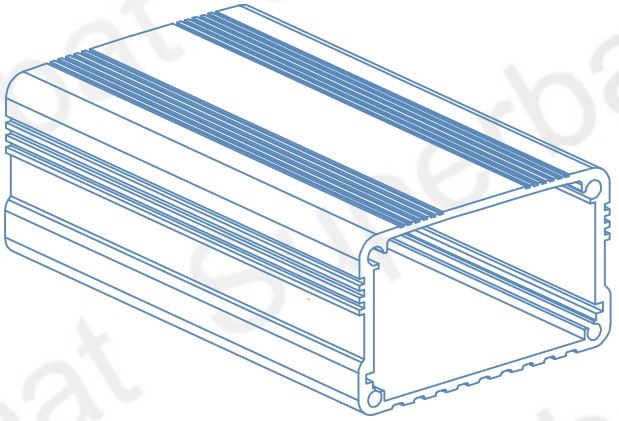

Superbat