UNIT	DATE	DESCRIPTION
25.4[1.000]	31/12/25	MODIFY DRAWING FORMAT

NOTE:
1. IMPEDANCE: 75 Ohms;
2. METAL COMPONENTS: NO BURRS, SCRATCHES, OR PLATING PEELING ON SURFACE;

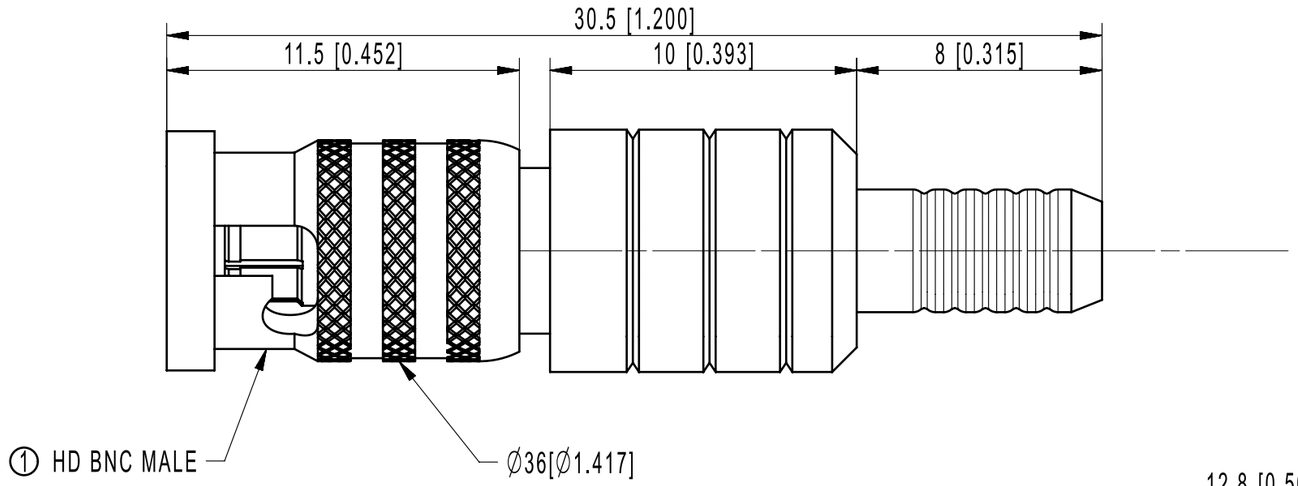

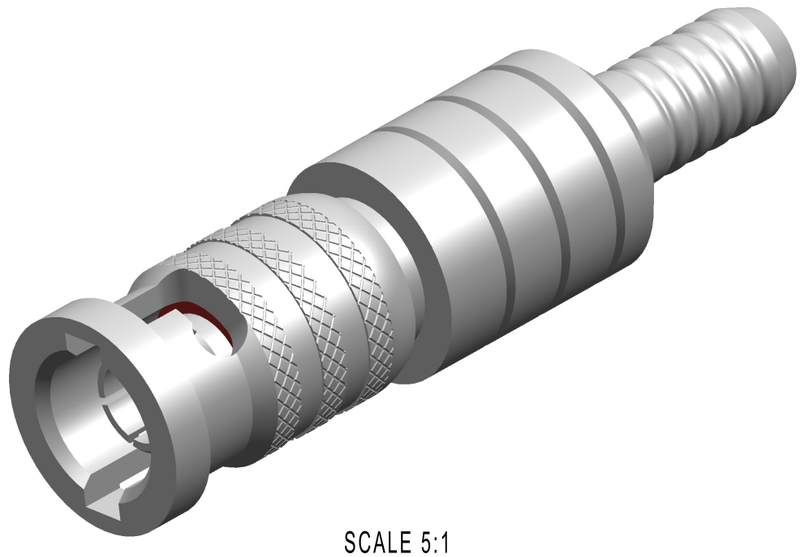

SCALE 5:1

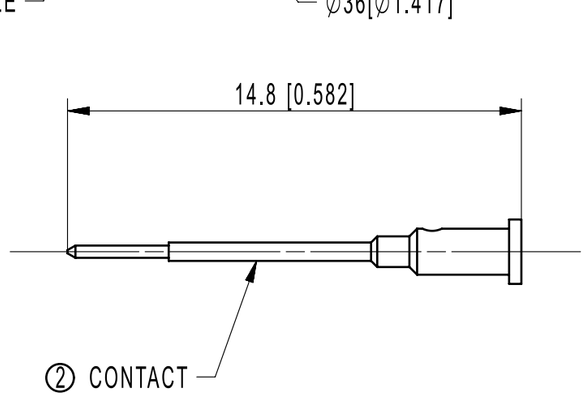

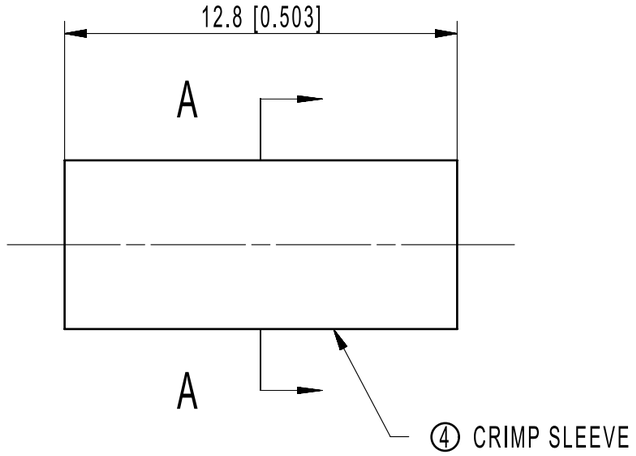

SECTION A-A

					THIRD-ANGLE PROJECTION		DATE 31/12/25
					APPROVED BY	CHECKED BY	DESIGNED BY
					ZZP 31/12/25	DZ 31/12/25	LB 31/12/25
4	CRIMP SLEEVE	BRASS	NICKEL PLATE	1			
3	INSULATION	PTFE	NONE	1	UNITS: mm[IN]	SCALE: N/A	REVISION: A
2	CONTACT	BRASS	GOLD PLATE	1	TOLERANCE		
1	HD BNC MALE	BRASS	NICKEL PLATE	1	X.X ±0.10 X.XX ±0.05 X° ±0.1°	Tel:86-0755-25614980 Email:info@rfsupplier.com Website:www.rfsupplier.com	
	DESCRIPTION	MATERIAL	FINISH				

superbat

B07-SP1855A-41BS00

FOR REFERENCE ONLY

SUBJECT TO THE ACTUAL PRODUCT